Home page
Product
Software and development to...
Banana Pi official website
Banana Pi English Forum
Banana Pi Chinese Forum
Youtube
Facebook page
Facebook group
Twitter
Reddit
BPI document specification
BPI Wiki GettingStarted Temp...
BPI Wiki Product Template

Banana Pi BPI--2K0300 Zhongke Longxin 2K0300 Embedded Single-board Computer

Banana Pi BPI--2K0300 Zhongke Longxin 2K0300 Embedded Single-board Computer

PAGE CONTENT
Hardware
Hardware interface indicati...
Technical specifications an...
Function block diagram
Structural size
40 PIN GPIO
40PIN FPC signal line interf...
WIFI module
Power interface and debug...
RTC battery socket
SPI FLASH burning seat
ADC interface/TTL debuggi...
JTAG debugging seat
Sample purchase

LABEL
Dragon core
Development board
2k0300

FINAL EDITING
Judy
April 16, 2025

Product introduction

Banana Pie BPI-2K0300 open source hardware is a single-board computer development board designed by Guangdong Bipai Technology and Guangdong Longxin based on Longxin's self-developed LoongArch architecture 64-bit SoC processor 2K0300. The board size is (85mm x 56mm) and compatible with Raspberry Pi 4B Size, positioning hole and 40 PIN GPIO definition. The board interface is rich in resources, integrating network, LCD, USB, TF card holder, Wi-Fi, audio, ADC, JTAG and other interfaces, with strong expansion ability, convenient for building scheme prototypes and application development innovation, and convenient peripheral ecological expansion. Support the development and design of a variety of operating systems such as Buildroot, Loongnix, OpenHarmony, OpenWRT and other operating systems and graphic GUI, and the supporting materials are complete.

The board adopts a full-table adhesive design, and the core components can be replaced by domestic devices. It has the characteristics of autonomy, safety, stability, reliability and practicality. It can be widely used in industrial automation control, industrial gateway, Internet of Things digital mining, energy and power, smart water, rail transit, teaching aids and other application fields. Learning evaluation and technical pre-research.

LS2K0300

The LS2K0300 chip is a multifunctional SOC chip based on the LA264 processor core. The chip integrates a 16-bit DDR4 memory controller and integrates rich peripheral interfaces: USB2.0 interface, GMAC interface, DVO display interface, I2S Audio interface, SPI/QSPI, ADC, SDIO, eMMC and other commonly used interfaces in the field of industrial control can be widely applied to industrial control, communication equipment, information appliances, Internet of Things and other application fields.

Product features

- (1) Rich in board interface resources
  - Longxin 2K0300 processor, integrated 64-bit LA264 core, main frequency 1.0GHz
  - On-board 1 piece of 16-bit DDR4 memory, memory capacity 512MB, maximum support 2GB
  - On-board 1 piece of 8GB eMMC storage particle
  - Support 4 USB2.0 interfaces
  - Support 1 Gigabit Ethernet RJ45 interface
  - Support 1 24-bit color RGB TFT LCD display interface
  - Support 1 3.5mm audio interface, support MIC IN and LINE OUT
  - Support 1 TF card slot
  - Support 1 USB interface WIFI
  - Support 1 40PIN GPIO (can reuse 5 UART/2 I2C/3 SPI/4 CAN/4 PWM)
  - Support 1-way debugging serial port, compatible with TTL level
  - Support 1 reset button
  - Support 2 LED lights, power supply and operating status indicator light
  - Support ADC function, 4-channel 12-bit AD
  - Support RTC function, CPU internal RTC leads
  - Support watchdog function
  - Support JTAG debugging interface
  - Support TYPE-C power interface, DC5V/2A voltage input
- (2) Convenient peripheral ecological expansion
  - The size and positioning hole of the board are compatible with Raspberry Pi 4B
  - Board 40 PIN GPIO definition compatible with Raspberry Pi 4B
  - The Raspberry Pi extension module can be reused, and the peripheral software and hardware ecology is rich, which is convenient for scheme prototype construction and application development and innovation.
- (3) Support a variety of operating systems and graphics libraries
  - The board supports Buildroot, Loongnix, OpenHarmony, OpenWRT and other operating systems.
  - Support C/C++, python and other mainstream programming languages, and complete supporting development materials, which is convenient for users to learn quickly and evaluate the program.
  - Support QT, LVGL and other graphic GUI development and design

Field of application

- Industrial automation control
- Industrial gateway
- Digital collection of the Internet of Things
- Energy and electricity

- Smart water affairs
- Rail transit
- Teaching aids

Get started quickly

BPI-2K0300 Quick to use

Hardware

Hardware interface indication

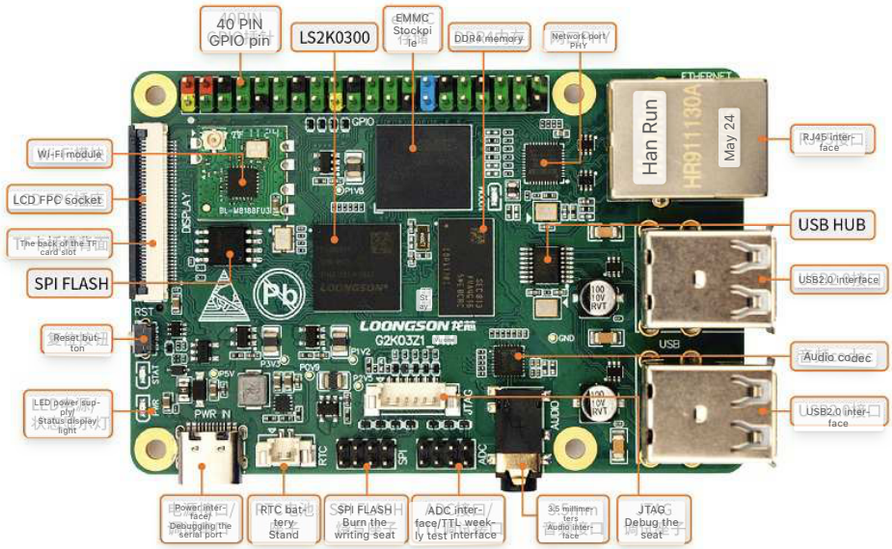

Technical specifications and parameters

Banana Pi BPI-2k0300 Hardware Specification Table	
Processor	Loongson 2K0300 1 LA264 processor core Main frequency 1.0GHz
Memory	512B DDR4
Storage	SPI Flash 1*SPI Flash, capacity 2MB, storage boot firmware uBoot
	eMMC 1x eMMC capacity 8GB
Network	1*Gigabit Ethernet RJ45 interface
LCD	1*RGB LCD, supports 24-bit color output, and the maximum resolution supports 1080P
audio	1*3.5mm audio interface, supports recording and playback
USB	4*USB2.0 HOST
WIFI	1*WIFI, USB interface
ADC	1*12-bit ADC interface, leading out 4 channels
TF card	1*TF card interface
GPIO	1*40 PIN GPIO (5 UART/2 I2C/3 SPI/4 CAN/4 PWM)
RTC	1*RTC interface
WTD	1*WTD
JTAG	1*JTAG debugging interface
Debugging the serial port	1*UART debugging interface

Reset button	1*Reset button
Power input	1*TYPE-C interface
Indicator light	1*Power indicator light
	1*Running status indicator light
System software	Firmware uBoot2022.04
	Kernel Linux5.10
	System Buildroot/Loongnix/SylixOS/OpenHarmony/openWRT
Input power supply	TYPE-C interface, DC 5V/2A input
Working temperature	0~70°C
Relative humidity	95%, no condensation
Storage temperature	-40~85°C
Typical power consumption	1.5W
Board size	85mm*56mm

Function block diagram

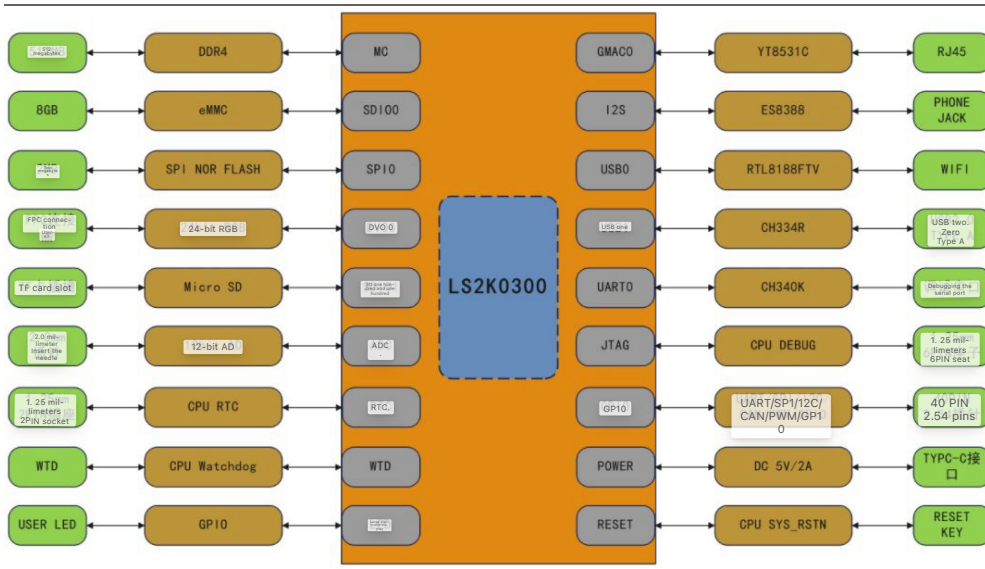

Structural size

PCB size	85mm x 56mm
Number of PCB layers	6th floor
PCB board thickness	1.6 millimeters
Number of mounting holes	4

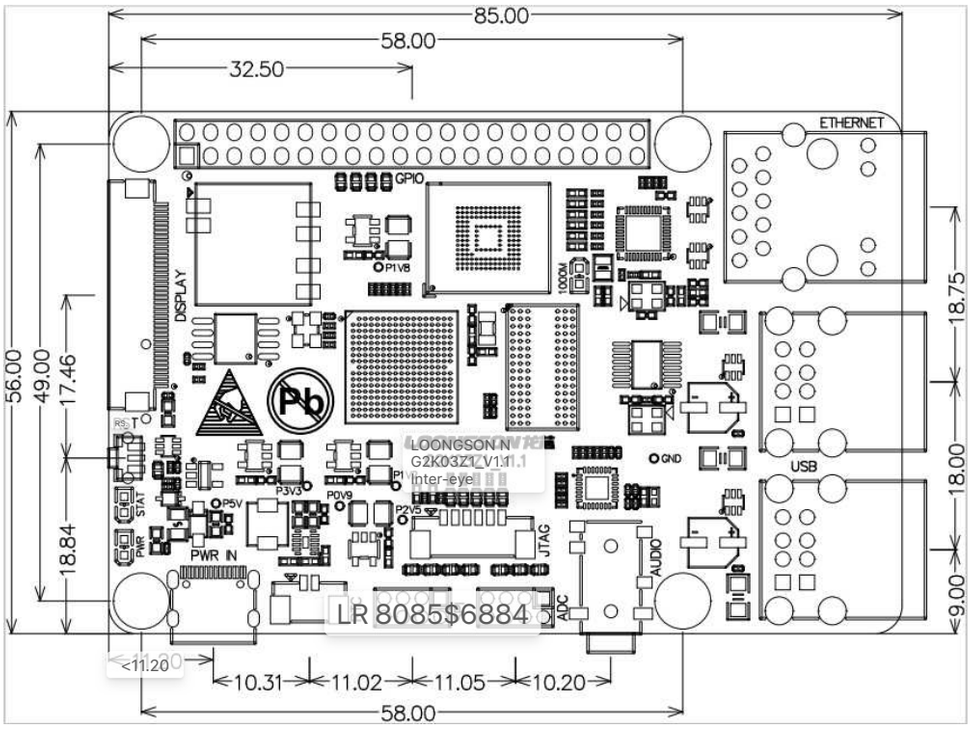

40 PIN GPIO

40 PIN GPIO is led out in the form of a 2.54mm pin, with rich interface reuse, which can be reused as UART/I2C/SPI/CAN/PWM/TIM/GPIO and other interfaces, compatible with Raspberry Pi interface, and reusable Raspberry Pi peripheral expansion hardware modules.

Function two	Function one	Line of stitches Definition	We ave 号	编	Line of stitches Definition	Function one	Function two
	DC POWER	3. Three V	1	2	Five V	DC POWER	
	I2C1_SDA	GPI 051	3	Eight	Five V	DC POWER	
	I2C1_SCL	GPIO50	5	6	GND		
TIM2_CH2	GPIO	GPI 088	7	8	GPI 044	UART2_TX	
		GND	9	Ten	GPI 045	UART2_RX	
CAN0_RX	GPIO	GPIO68	11	12	GPIO63	SPI1_CS	UART4_TX
CAN0_TX	GPIO	GPI 069	13	14	GND		
TIM1_CH1	GPIO	GPI 081	15	16	GPIO70	GPIO	CAN1_RX
		3. Three V	17	18	GPIO71	GPIO	CAN1_TX
UART9_TX	SPI2_MOSI	GPI 066	19	20	GND		
UART5_TX	SPI2_MISO	GPI 065	21	22	GPI 084	GPIO	TIM1_CH1N
UART5_RX	SPI2_CLK	GPI 064	23	Twenty-four	GPI 067	SPI2_CS[0]	UART9_RX
		GND	25	26	GPI 085	SPI2_CS[1]	TIM1_CH2N
	I2C2_SDA	GPI 053	27	28	GPI 052	I2C2_SCL	
CAN2_RX	GPIO	GPI 072	29	30	GND		
CAN2_TX	GPIO	GPI 073	31	32	GP 1086	PWM0	TIM1_CH3N
TIM2_CH1	PWM1	GPI 087	33	34	GND		
UART6_RX	SPI1_MISO	GPIO61	35	36	GPI 075	GPIO	CAN3_TX
CAN3_RX	GPIO	GPI 074	37	38	GPI 062	SPI1_MOSI	UART4_RX
		GND	39	40	GPIO60	SPI1_CLK	UART6_TX

40PIN FPC signal line interface definition

The LCD interface supports 24-bit RGB LCD screen, supports I2C touch interface, and is compatible with positive point atomic screen. The 40PIN FPC signal line interface is defined as follows:

Serial number	Name	Explain
1, 2	VCC	5V power input
three to ten	R0 to R7	8-bit RED data cable
11	GND	Bottom line
12 to 19	G0 to G7	8-bit GREEN data cable
20	GND	Bottom line
twenty-one to twenty-eight	B0~B7	8-bit BLUE data cable

29	GND	Bottom line
30	CLK	Pixel clock
31	HSYNC	Horizontal synchronization signal
32	VSYNC	Vertical synchronization signal
33	LCD_EN	Data enable signal
34	LCD_BL	Backlight control signal
35	CT_RST	Capacitive touch screen reset signal
36	CT_SDA	Capacitive touch screen I2C_SDA signal
37	NC	NC
38	CT_SCL	Capacitive touch screen I2C_SCL signal
39	CT_INT	Capacitive touch screen interrupt signal
40	Reset	LCD reset signal (low level is valid)

WIFI module

The WIFI module adopts USB2.0 interface, the main control chip is RTL8188FTV, supports the 2.4G frequency band, and supports the IEEE802.11b/g/n standard protocol.

Power interface and debugging serial port

The power interface and the debugging serial port share the TYPE-C interface. The debugging serial port is designed with the USB-to-serial port chip CH340K, which is convenient for users to access the computer's USB interface for debugging, without the need for external serial port module. If the external load is large, please use 5V/2A DC TYPE-C power supply to power, external USB debugging serial module, and TTL debugging serial port.

RTC battery socket

On-board 2PIN 1.25mm pin holder connector, used with CR2032 button battery, save time when power is lost.

SPI FLASH burning seat

On-board 2*4 2.0mm pin, leading out SPI FLASH burning base, external SPI FLASH burning device, burning update uBoot firmware, convenient to use when the board becomes brick.

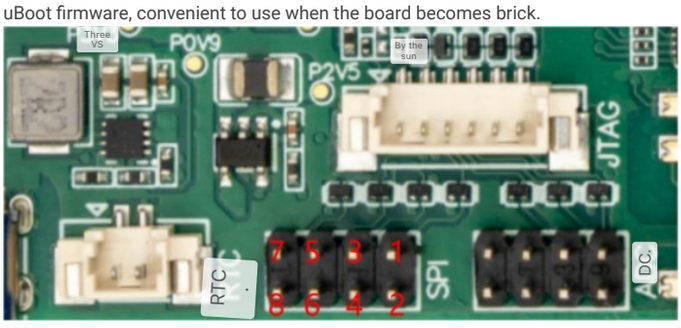

Pin number	Definition of pin	Pin number	Definition of pin
1	SPI0_CS	2	3.3V
3	SPI0_MISO	four	NC
5	MRESET#	6	SPI0_CLK
7	GND	8	SPI0_MOSI

ADC interface/TTL debugging serial port

On-board 2*4 2.0mm pin, leading to ADC interface, TTL debugging serial port, external watchdog enable interface. The ADC interface leads to 4 channels ADC0, ADC1, ADC4, ADC5, and supports 2 groups of differential mode and single-end mode. UART0 acts as a debugging serial port, leading UART0_TX/UART0_RX to the pin, which is convenient for users to externally debug the serial port module. The external watchdog enables the pin WDI_EN external high level, turns on the external watchdog, and the external watchdog is turned off by default.

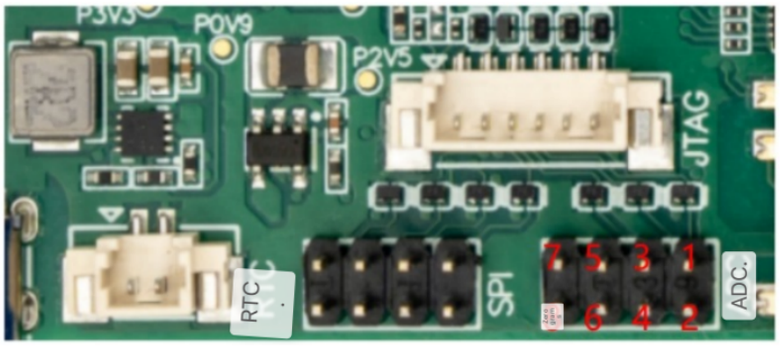

Pin number	Definition of pin	Pin number	Definition of pin
1	UART0_TX	2	UART0_RX
3	WDI_EN	four	3.3V
5	AI 0	6	AI one
7	AI four	8	AI five

JTAG debugging seat

The JTAG debugging interface is led by a 1.25mm 6PIN socket, which can be used for CPU debugging and SPI FLASH firmware burning. The interface is defined as follows:

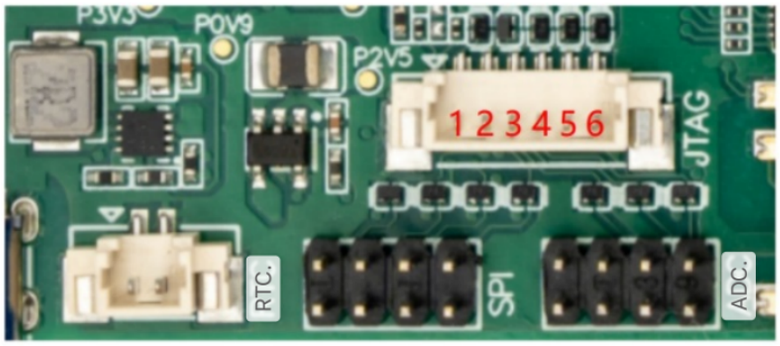

Pin number	Definition of pin	Pin number	Definition of pin
1	JTAG_TRST	2	JTAG_TDI
3	JTAG_TDO	four	JTAG_TMS
5	JTAG_TCK	6	GND

Sample purchase

Taobao Store: https://item.taobao.com/item.htm? id=913024012176&spm=a213gs.v2success.0.0.58cf4831WZkVVc

The content is provided by BananaPi under the Creative Commons Attribution-Alike Sharing license. | Powered by Wiki.js